NHDP – 200 BAR

Caratteristiche Tecniche **Albero maschio – Solid shaft** **Technical Characteristics**

Pump Pompa	Pressure Pressione		Volume Portata				RPM giri/min		Power Potenza			
			l/min		GPM				HP		kW	
	bar	PSI	50 Hz	60 Hz	50 Hz	60 Hz	50 Hz	60 Hz	50 Hz	60 Hz	50 Hz	60 Hz
NHDP8520	200	2900	8.5	10.1	2.2	2.7	1450	1740	4.3	5.1	3.2	3.9
NHDP1020	200	2900	10	12	2.6	3.2	1450	1740	4.9	6.3	3.7	4.7
NHDP1120	200	2900	11	13.2	2.9	3.5	1450	1740	5.7	6.8	4.3	5.1
NHDP1220	200	2900	12	14	3.1	3.7	1450	1740	6.1	7.2	4.5	5.3
NHDP1320	200	2900	13	15.5	3.4	4.0	1450	1740	6.7	7.2	4.5	5.3
NHDP1420	200	2900	14	17	3.7	4.5	1450	1740	7.2	8.5	5.3	6.3
NHDP1520	200	2900	15	18	4.0	4.7	1450	1740	7.7	9.2	5.7	6.8

Dimensioni d'ingombro *Overall dimensions*

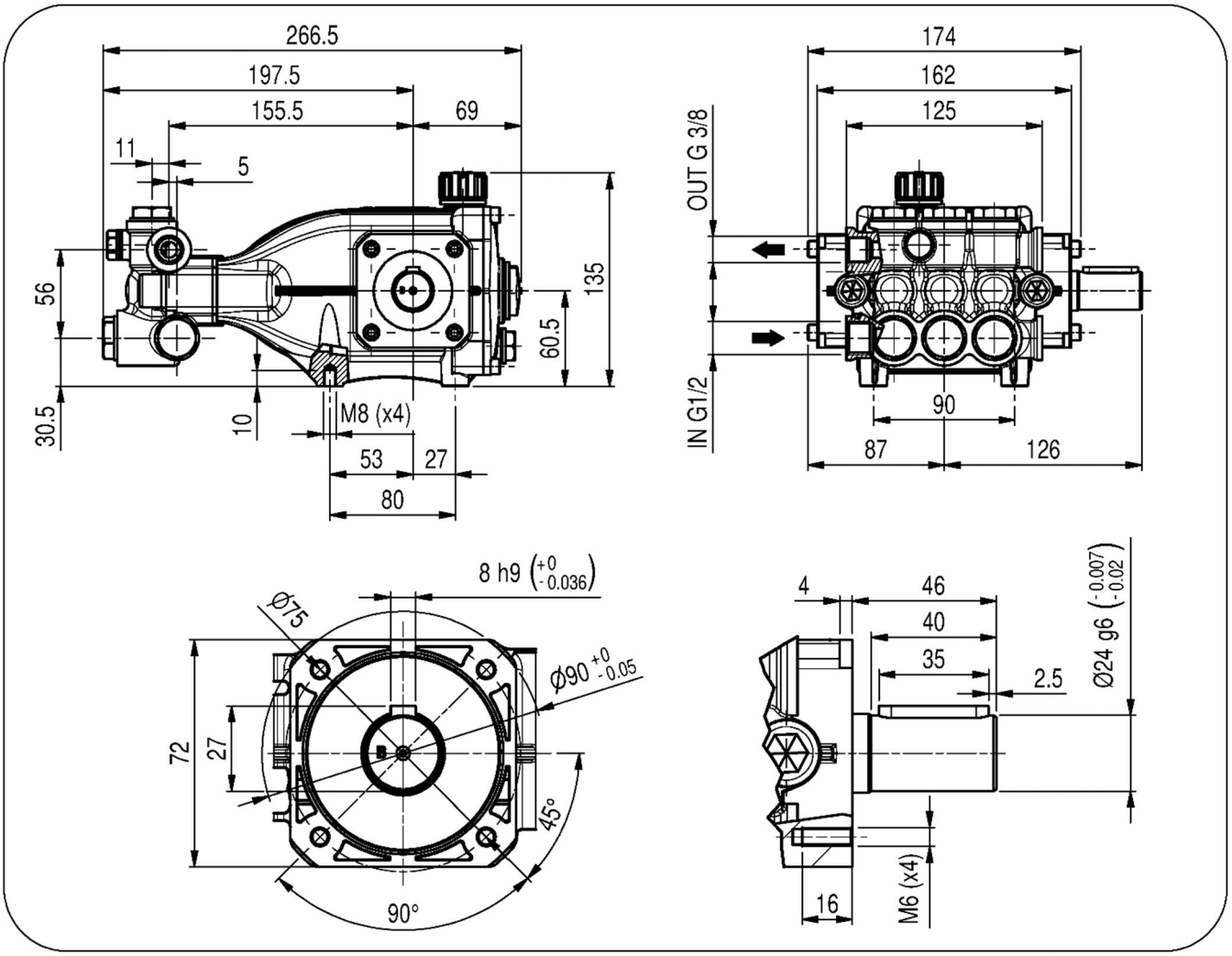

Lubrificazione: Olio SAE 10W40
Capacità: 0.4 Litri
Peso pompa: 8.2 kg

Lubrication: SAE 10W40 Oil
Capacity: 0.4 Litres
Weight: 8.2 kg

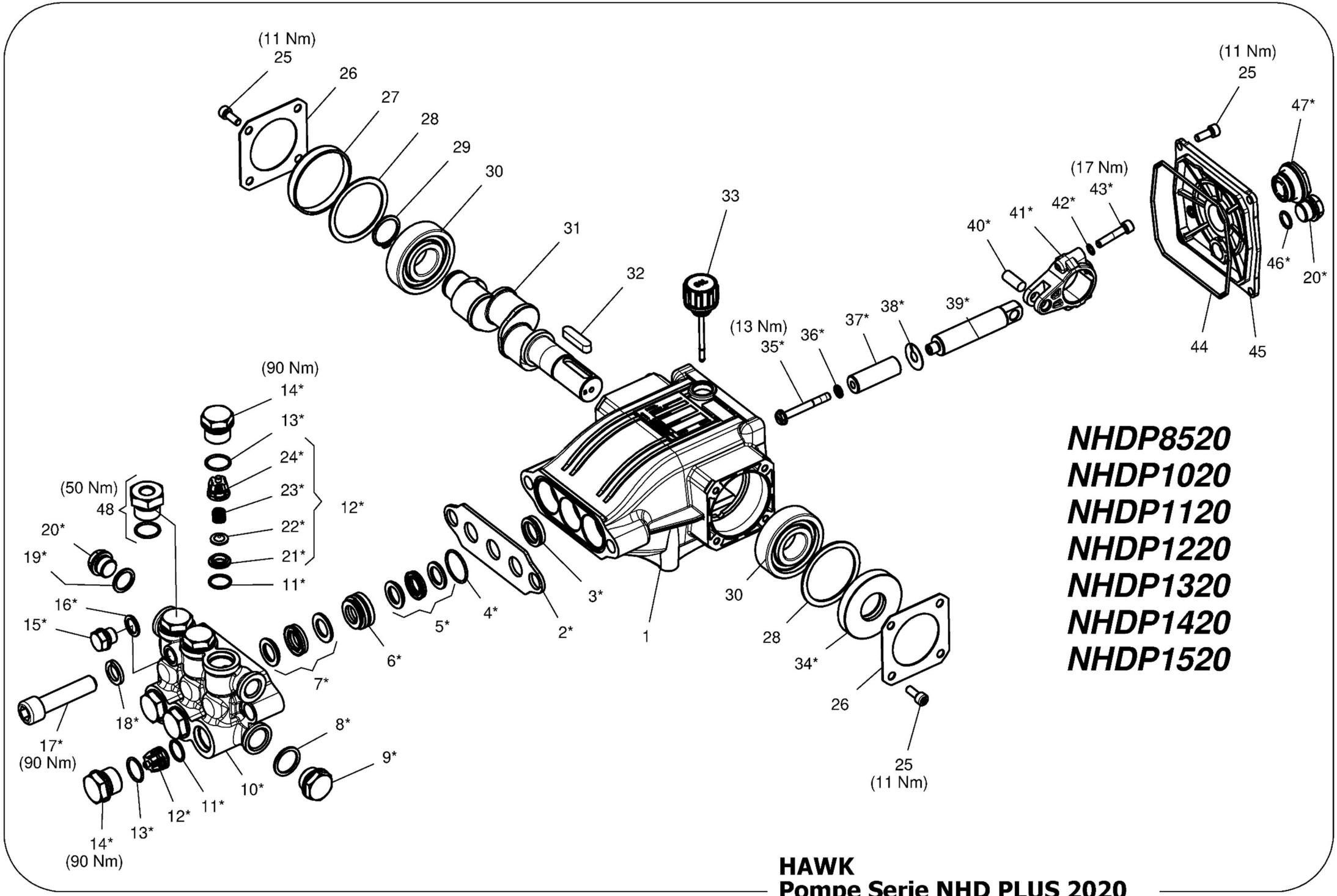

HAWK
Pompe Serie NHD PLUS 2020
NHD PLUS Pumps 2020 Serie

NHDP 2020 SERIES

ORDINARY MAINTENANCE KIT / KIT MANUTENZIONE ORDINARIA

KIT	*Item* Pos.	*Part Number* Codice	*Description*	Descrizione	*Q.TY by Pump* Q.TA' per Pompa	*NHDP8520R/L*	*NHDP1020R/L*	*NHDP1120R/L*	*NHDP1220R/L*	*NHDP1320R/L*	*NHDP1420R/L*	*NHDP1520R/L*
A	4 - 5 – 7 - 17	1.905-736.0	*PLUNGER SEALS DIA. 16 mm*	GUARNIZIONI PISTONE Ø16	1	•	•	•	•	•	•	•
B	11 – 12 (21 22 - 23 - 24) – 13	1.905-617.0	*COMPLETE VALVE*	VALVOLA COMPLETA	1							

EXTRAORDINARY MAINTENANCE KIT / KIT MANUTENZIONE STRAORDINARIA

KIT	*Item* Pos.	*Part Number* Codice	*Description*	Descrizione	*Q.TY by Pump* Q.TA' per Pompa	*NHDP8520R/L*	*NHDP1020R/L*	*NHDP1120R/L*	*NHDP1220R/L*	*NHDP1320R/L*	*NHDP1420R/L*	*NHDP1520R/L*
C	4- 5- 6- 7 - 17	1.904-737.0	*COMPLETE SEALS PACKING DIA. 16 mm*	PACCO COMPLETO GUARNIZIONI PISTONE Ø16	1	•	•	•	•	•	•	•
D	35 - 36- 37- 38	1.099-738.0	*PLUNGER DIA. 16 mm*	PISTONE Ø16	3							
E	3	1.099-740.0	*PLUNGER OIL SEALS*	ANELLI TENUTA OLIO ASTA	1							
F	20- 27- 34 44- 46- 47	1.905-624.0	*KIT CRANKCASE SEALS*	KIT TENUTE CARTER	1							
G	4- 5- 6 7- 8- 9- 10 11- 12 (21 22 - 23 - 24) – 13 - 14 – 15 - 16 - 17 - 18 - 19- 20	1.904-738.0	*COMPLETE MANIFOLD*	TESTATA COMPLETA	1							
H	39 - 40- 41- 42 - 43	1.905-742.0	*CONNECTING ROD PLUNGER ROD ASSY*	PREMONTATO ASTA-BIELLA PISTONE	3							
I	13- 14	1.904-249.0	*VALVE PLUG ASSY*	PREMONTATO TAPPO VAM	6							

"Q.TY by Pump" => Necessary quantity to repair one pump
"Q.TA' per Pompa" => Quantità necessaria per riparare una pompa

OPTIONAL

Item Pos.	Part Number Codice	Description	Descrizione	Q.TY by Pump Q.TÀ per Pompa	NHDP8520R/L	NHDP1020R/L	NHDP1120R/L	NHDP1220R/L	NHDP1320R/L	NHDP1420R/L	NHDP1520R/L
48	9.853-424.0	*THREADED BRASS PLUG G1/4*	PREMONTATO TAPPO FORATO	1	•	•	•	•	•	•	•

TOOL KIT

Part Number Codice	Description	Descrizione	Q.TY by Pump Q.TÀ per Pompa	NHDP8520R/L	NHDP1020R/L	NHDP1120R/L	NHDP1220R/L	NHDP1320R/L	NHDP1420R/L	NHDP1520R/L
1.904-744.0	TOOL-KIT	TOOL-KIT	1	•	•	•	•	•	•	•
1.905-591.0	TOOL-KIT EXTRAORDINARY	TOOL-KIT MANUTENZIONE STRAORINARIA	1							

IMPORTANT **IMPORTANTE**

* ***Part available ONLY in kit***
Disponibile SOLO in kit

(…) **Parts pre-assembled**
Parti pre-assemblate

PARTS LIST LISTA PARTI

Item Pos	*Part Number* Codice	*Description*	Descrizione	*KIT*	*Q.TY* Q.TÀ	*NHDP8520R/L*	*NHDP1020R/L*	*NHDP1120R/L*	*NHDP1220R/L*	*NHDP1320R/L*	*NHDP1420R/L*	*NHDP1520R/L*
1	9.850-369.0	*CRANKCASE*	CARTER		1							
2*	9.853-555.0	*NHD PLUS CYLINDERHEAD SPACER*	DISTANZIALE TESTATA NHD PLUS		1							
3*		*PLUNGER OIL SEAL*	ANELLO RADIALE	E	3							
4*		*"O" RING Ø1.78X26.7*	"O" RING Ø1.78X26.7	A-C-G	3							
5*		*SEALING RING Ø16X24X8 "U" HT*	*ANELLO TENUTA PIST. Ø16X24X8 "U" HT*	A-C-G	3							
6*		*PRESSURE RING DIA. 16 MM*	PRESSORE "U" Ø16	C-G	3							
7*		*SEALING RING Ø16X26X9,5 "U" HT*	*ANELLO TENUTA PIST. Ø16X26X9,5 "U" HT*	A-C-G	3							
8*		*COPPER WASHER G1/2*	GUARNIZIONE RAME G1/2	G	1							
9*		*BRASS PLUG G1/2*	TAPPO OTTONE G1/2	G	1							
10*		*CYLINDERHEAD*	TESTATA NHD PLUS OT58	G	1							
11*		*"O" RING Ø1.78X15.6*	"O" RING Ø1.78X15.6	B-G	6							
12*		*VALVE ASSEMBLY*	VALVOLA PREMONTATA	B-G	6							
13*		*"O" RING Ø1,78X18.77*	"O" RING Ø1.78X18.77	B-G-I	6							
14*		*VALVE PLUG*	TAPPO VALVOLA	G-I	6							
15*		*BRASS PLUG G1/4*	TAPPO OTTONE G1/4	G	1	•	•	•	•	•	•	•
16*		*COPPER WASHER G1/4*	GUARNIZIONE RAME G1/4	G	1							
17*		*MANIFOLD STUD BOLT M14X60*	VITE TCEI M14X60	A-C-G	2							
18*		*LOCK-WASHER*	ROSETTA ELASTICA Ø14	G	2							
19*		*COPPER WASHER G3/8*	GUARNIZIONE RAME G 3/8	G	1							
20*		*BRASS PLUG G 3/8*	TAPPO OTTONE G 3/8	F-G	2							
21*		*VALVE SEAT*	SEDE VALVOLA	B-G	6							
22*		*VALVE PLATE*	PIATTELLO VALVOLA	B-G	6							
23*		*VALVE SPRING*	MOLLA VALVOLA	B-G	6							
24*		*VALVE CAGE*	GABBIA VALVOLA	B-G	6							
25	9.851-474.0	*SCREW M6X16*	VITE TCEI M6X16		12							
26	9.850-379.0	*BEARING COVER*	COPERCHIO CUSCINETTO		2							
27*		*BEARING SEAL*	CAPPELLOTTO CUSCINETTO	F	1							
28	9.850-554.0	*CRANKSHAFT SEAL SPACER*	DISTANZIALE PARAOLIO ALBERO		2							
29	9.851-198.0	*SNAP RING DIA. 25 MM*	ANELLO Ø25		1							
30	9.850-460.0	*BALL BEARING*	CUSCINETTO A SFERE		2							
31	9.850-220.0	*SINGLE-ENDED SHAFT*	ALBERO SEMPLICE P.D.F		1							•
	9.850-224.0	" " "	" " "		1						•	
	9.850-225.0	" " "	" " "		1			•				
	9.850-226.0	" " "	" " "		1	•						
	9.850-227.0	" " "	" " "		1		•					
	9.851-956.0	" " "	" " "		1				•			
	9.850-228.0	" " "	" " "		1					•		

Item Pos	Part Number Codice	Description	Descrizione	KIT	Q.TY Q.TÀ	NHDP8520R/L	NHDP1020R/L	NHDP1120R/L	NHDP1220R/L	NHDP1320R/L	NHDP1420R/L	NHDP1520R/L
32	9.850-446.0	*CRANKSHAFT KEY*	CHIAVETTA		1							
33	9.851-286.0	*OIL DIP STICK*	TAPPO LIVELLO OLIO		1							
34*		*CRANKSHAFT SEAL*	ANELLO RADIALE	F	1							
35*		*PLUNGER BOLT*	VITE PISTONE	D	3							
36*		*BONDED SEAL - Ø6,7X11X1 AISI 304*	BONDED SEAL - Ø6,7X11X1 AISI 304	D	3							
37*		*PLUNGER DIA. 16 MM*	PISTONE Ø16	D	3							
38*		*COPPER SPACER*	ROSETTA RAME	D	3							
39*		*PLUNGER ROD*	ASTA PISTONE	H	3							
40*		*CONNECTING ROD PIN*	SPINOTTO	H	3	•	•	•	•	•	•	•
41*		*CONNECTING ROD*	BIELLA	H	3							
42*		*SPRING WASHER DIA. 6 MM*	ROSETTA SCHNORR Ø6	H	6							
43*		*CONNECTING ROD SCREW*	VITE M6X30	H	6							
44*		*"O" RING Ø2.62X111.62*	"O" RING Ø2.62X111.62	F	1							
45	9.850-392.0	*CRANKCASE COVER*	COPERCHIO POSTERIORE		1							
46*		*"O" RING Ø1.78X14*	"O" RING Ø1.78X14	F	1							
47*		*SIGHT GLASS G3/4*	SPIA LIVELLI OLIO G3/4	F	1							