HAWK INTERNATIONAL
LEUCO S.p.A. A company of the Group KÄRCHER

VBT 2403.54 2403.94 100 BAR FOG

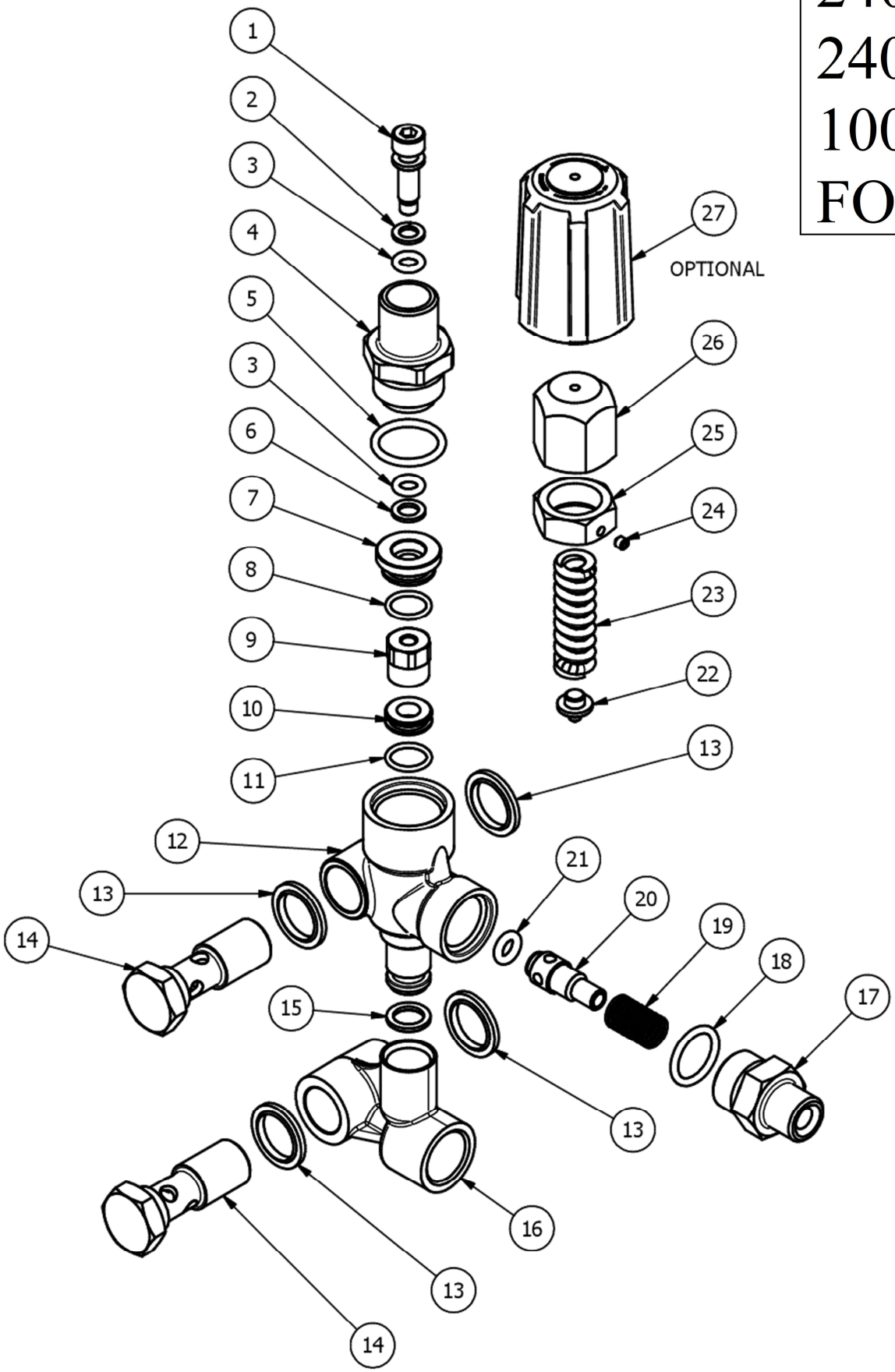

Rev 3 03-17

Codice Part No.	Pressione Max Max Pressure		Portata Flow rate		Temp. Max Max Temp.	Inlet Port Entrata	Outlet Port Uscita	For pump series Per pompe serie
	bar	PSI	l/min	GPM	°C			
2403.54	100	1450	25	6.6	65	G1/2” F	G3/8” M	FOG
2403.94	100	1450	25	6.6	65	G1/2” F	G3/8” M	FOG

DIMENSIONI D’INGOMBRO

OVERALL DIMENSIONS

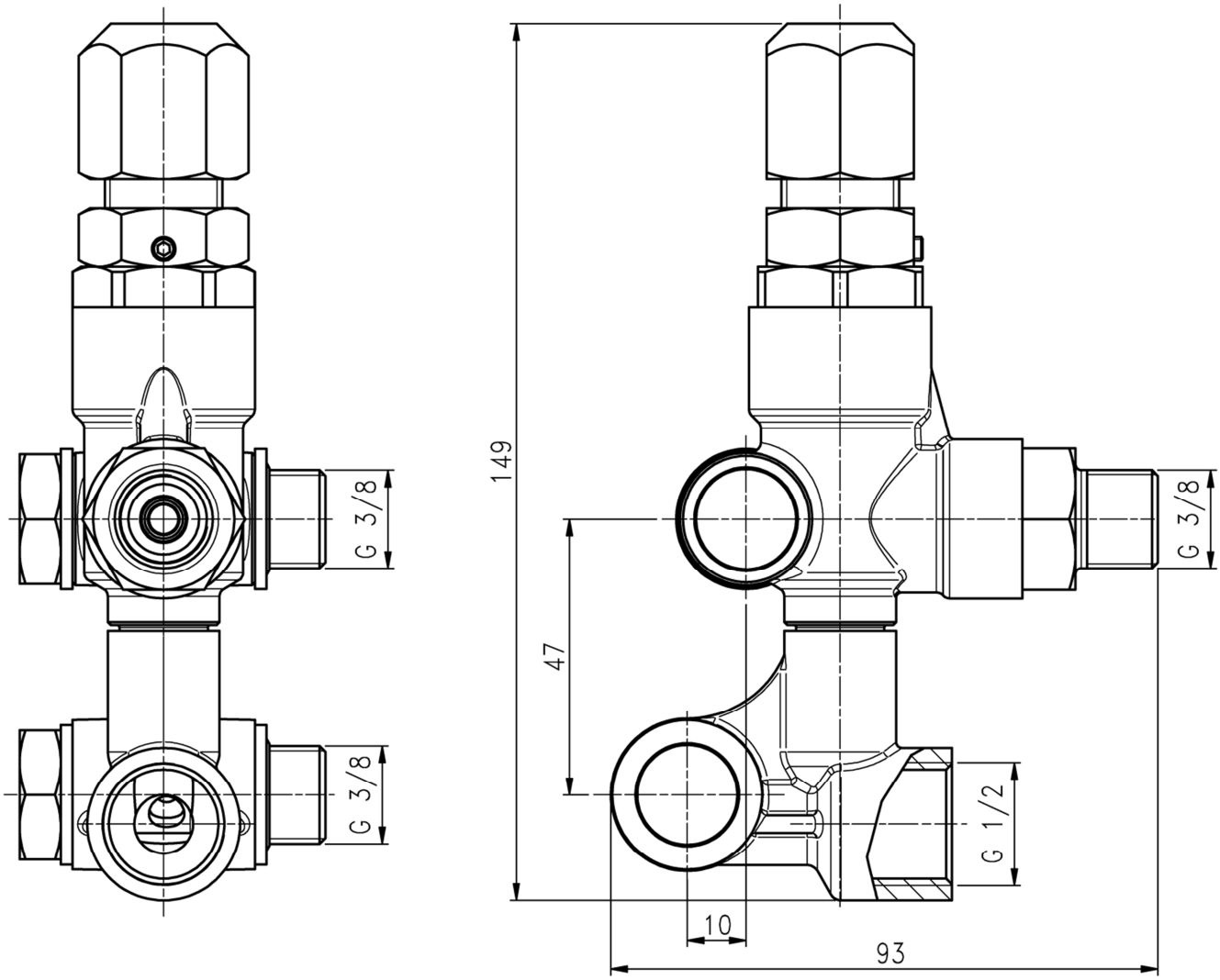

Rev 3 03-17

HAWK INTERNATIONAL
LEUCO S.p.A. A company of the Group KÄRCHER

SPARE PARTS KIT KIT RICAMBI

Codice Code	Descrizione/Description #	Componente / Parts	Q.tà Q.ty	2403.54	2403.94
2628.21		Kit completo O-ring / Kit repair O-rign	1	*	*
	2	0009.18	1	*	*
	3	0601.70	2	*	*
	5	0601.65	1	*	*
	6	0009.19	1	*	*
	8	0601.14	1	*	*
	11	0601.41	1	*	*
	15	0601.96	1	*	*
	18	0601.19	1	*	*
	21	0601.98	1	*	*
2628.20		Kit Uscita / Kit Outlet	1	*	*
	18	0601.19	1	*	*
	19	0900.04	1	*	*
	20	1102.13	1	*	*
	21	0601.98	1	*	*
2628.02		Kit Asta / Kit repair Stem	1	*	*
	1	1206.11	1	*	*
	9	4504.00	1	*	*
	10	1503.16	1	*	*
	11	0601.41	1	*	*
	22	1202.07	1	*	*
	23	0900.31	1	*	*

HAWK INTERNATIONAL
LEUCO S.p.A. A company of the Group KÄRCHER

SPARE PARTS LISTA RICAMBI

#	Q.TA' Q.TY	CODICE PART NO.	DESCRIZIONE	DESCRIPTION	2403.54	2403.94
1	1	1206.11	PISTONE	STEM	*	*
2	1	0009.18	ANELLO ANTIESTRUSIONE	BACK RING	*	*
3	2	0601.70	O-RING Ø2,62x6,02	O-RING Ø2,62x6,02	*	*
4	1	1407.24	RACCORDO GUIDA ASTA	CONNECTOR	*	*
5	1	0601.65	O-RING Ø2,62x20,24	O-RING Ø2,62x20,24	*	*
6	1	0009.19	ANELLO ANTIESTRUSIONE	BACK RING	*	*
7	1	0101.11	BUSSOLA	GUIDE BUSHING	*	*
8	1	0601.14	O-RING Ø1,78x14	O-RING Ø1,78x14	*	*
9	1	4504.00	PREMONTATO SFERA	BALL SUB-ASSY	*	*
10	1	1503.16	SEDE	SEAT	*	*
11	1	0601.41	O-RING Ø1,78x12,42	O-RING Ø1,78x12,42	*	*
12	1	0204.68	CORPO VALVOLA	VALVE BODY	*	*
13	4	1408.02	RONDELLA TENUTA 3/8	SEAL WASHER 3/8	*	*
14	2	1800.04	VITE CAVA 3/8	HOLLOW BOLT 3/8		*
	2	1800.22	VITE CAVA OTTONE 3/8	BRASS HOLLOW BOLT 3/8	*	
15	1	0601.96	O-RING Ø2,62x10,78	O-RING Ø2,62x10,78	*	*
16	1	0210.10	COLLETTORE BY-PASS	BY-PASS MANIFOLD	*	*
17	1	1407.25	RACCORDO USCITA	OUTLET CONNECTOR	*	*
18	1	0601.19	O-RING Ø2,62x17,13	O-RING Ø2,62x17,13	*	*
19	1	0900.04	MOLLA OTTURATORE	POPPET SPRING	*	*
20	1	1102.13	OTTURATORE	POPPET	*	*
21	1	0601.98	O-RING Ø3x6	O-RING Ø3x6	*	*
22	1	1202.07	PIATTELLO	PLATE	*	*
23	1	0900.31	MOLLA	SPRING	*	*
24	1	1803.04	VITE STEI M4x4	SET SCREW	*	*
25	1	0302.29	DADO	NUT	*	*
26	1	0905.10	MANOPOLA	HANDLE	*	*
27	1	0905.11	MANOPOLA PLASTICA (OPTIONAL)	PLASTIC HANDLE (OPTIONAL)	*	*

Rev 3 03-17